Quartz Crystal Unit CM206S

- kHz Range Crystal Unit SMD
- SMD in plastic case (8.0 x 3.8 x 2.54) mm
- on Tape & Reel
- Available in many standard and special frequencies
- RoHS conform; Lead-free product

External Dimensions

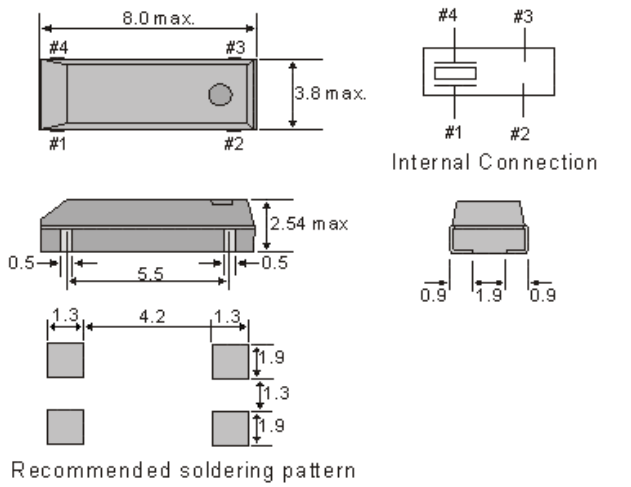

Soldering Conditions

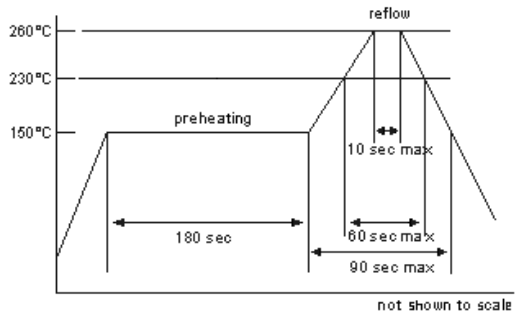

Specifications - Product No. A000032768BHFPPN43EE

Holder Type:	CM206S
Frequency:	32.768000 kHz
Frequency Stability at 25°C:	±20 ppm
Temperature Stability:	±20 ppm @ -40°C to +85°C
Storage Temperature:	-55°C to +125°C
Drive Level:	1.0 µW max.
Load Capacitance (CL):	6 pF
Shunt Capacitance (C0):	< 2.0 pF
Equivalent Series Resistance:	35 k Ohm max.
Aging:	± 5 ppm / year max.

GERMANY:
COMTEC CRYSTALS GmbH · Sultenstrasse 12-14
85586 Poing / GERMANY
Phone +49 8121 778160 · Fax +49 8121 778177
e-Mail info@comtec-crystals.com
Internet: http://www.comtec-crystals.com
Subject to change without prior notice.

Technical Data and Graphics are all under Copyright (c) of Comtec Crystals Group.

FRANCE:
COMTEC CRYSTALS SARL · 23, rue du Faucon
67500 Haguenau / FRANCE
Phone +33 388 732162 · Fax +33 388 730118
e-Mail sales@comtec-crystals.com
Internet: http://www.comtec-crystals.com
Sous réserve de modifications.