COMTEC CRYSTALS Group Data Sheet

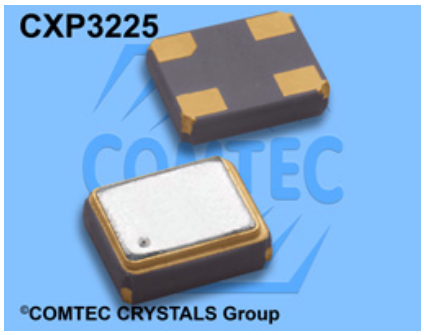

Programmable Crystal Clock Oscillator
CXP3225TM3.3, (3.3V LVCMOS) 1.0 ~ 200.0MHz

- SMD in ceramic case (3.2 x 2.5 x 1.0) mm
- Tri-State Enable / Disable
- LVCMOS Square Wave
- on Tape & Reel (Tape 16mm) or on trays
- RoHS conform; Lead-free product
- Vibration: MIL-STD-202F method 204, 35G, 50 to 2000 Hz
- Shock: MIL-STD-202F method 213B, test cond. E, 1000GG 1/2 sine wave
- Available in many standard and special frequencies

Programmable Crystal Clock Oscillator CXP3225TM3.3

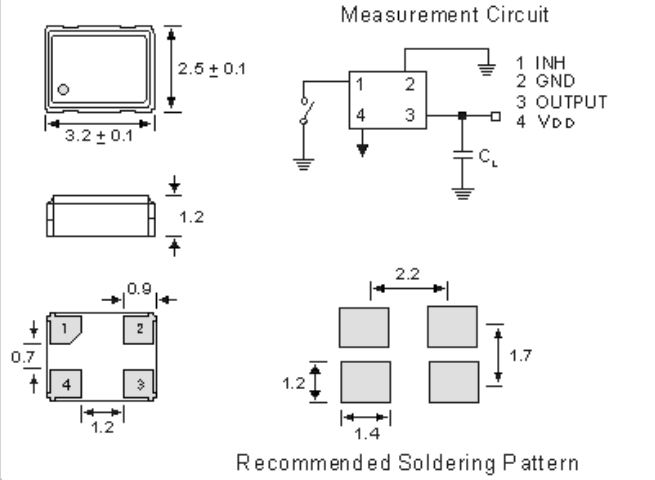

CMOS/TTL Output Wave Form

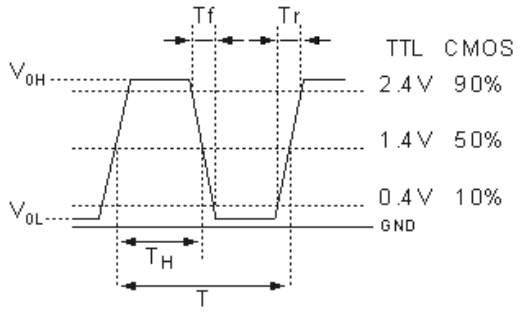

Specifications - Product No. G016384000LGSUPN43AB

Holder Type:	Programmable Crystal Clock Oscillator CXP3225TM3.3, (3.3V LVCMOS)
Frequency:	16.384000 MHz
Frequency Stability at 25°C:	± 25.0 ppm at 25°C
Operating Temperature Range:	± 25.0 ppm over -40°C to +85°C (incusive of 25°C tolerance, ±10% input voltage variation, load change, aging, shock and vibration)
Storage Temperature:	-55°C to +150°C
Power Supply Voltage (Vdd):	+ 3.3V D.C. ± 10%
Max. Supply Current 25/200MHz:	3.3V/4.0/20mA; (15pF)
PLL Off: 25MHz Supply Current:	3.3V 4.0mA (15pF)
PLL On 200MHz Supply Current:	3.3V 20mA; (15pF)
Rise/Fall Time:	3.3V 3.0ns typ. (25MHz, PLL off) 3.3V 1.5ns typ. (200MHz, PLL off)
Output Load:	15 pF CMOS
Start Up Time:	5ms max.
Output Symmetry (Duty Cycle):	50% ±5% (measured at 50% Vdd)
Period Jitter, peak to peak:	70ps typical
Low Phase Noise (typical):	-114dBc/Hz at 1KHz offset (133MHz)
Tri-state Function Pin 1 (option):	Pin 1 = H or open.... Output active at pin 3 Pin 1 = L.... high impedance at pin 3
Output Disable/Enable Time:	150 ns
Aging:	< ±5ppm max. / year (max.)
Reflow Condition:	260°C max. for 10 sec.

GERMANY:
COMTEC CRYSTALS GmbH · Sultenstrasse 12-14
85586 Poing / GERMANY
Phone +49 8121 778160 · Fax +49 8121 778177
e-Mail info@comtec-crystals.com
Internet: http://www.comtec-crystals.com
Subject to change without prior notice.

Technical Data and Graphics are all under Copyright (c) of Comtec Crystals Group.

FRANCE:
COMTEC CRYSTALS SARL · 23, rue du Faucon
67500 Haguenau / FRANCE
Phone +33 388 732162 · Fax +33 388 730118
e-Mail sales@comtec-crystals.com
Internet: http://www.comtec-crystals.com
Sous réserve de modifications.